SERVICE INSTRUCTION

SBC

3" – Cable Release Version

VERSION: 240229

MannTek

SBC – 3” – CABLE RELEASE VERSION

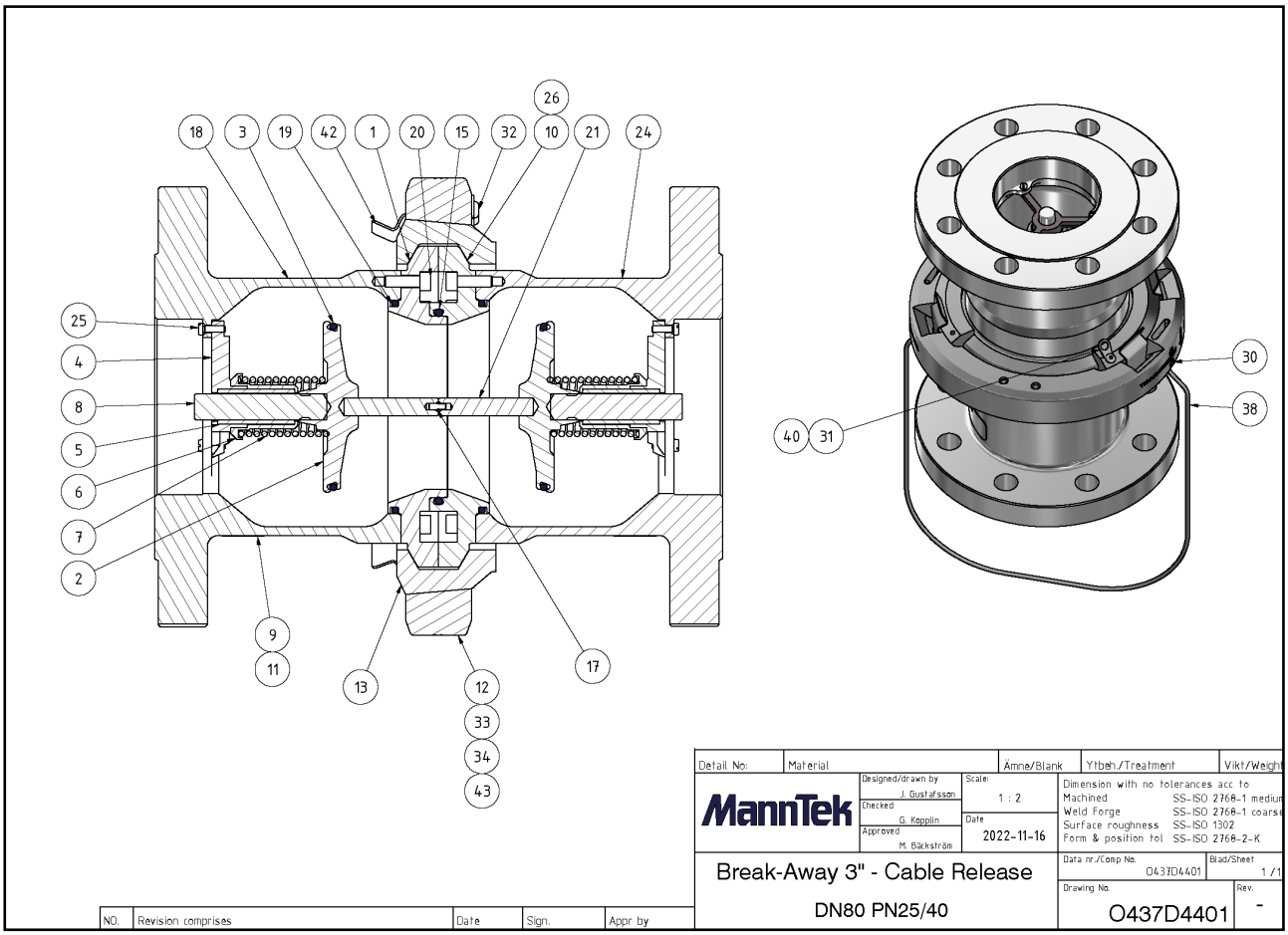

MATERIAL:	Aluminium, Stainless Steel
TYPE OF CONNECTION:	Threaded and Flanged couplings have the same service instruction.
PERFORM A SERVICE:	If leaking or change of media. According to application service plan, (see regular service p.4)

PLEASE NOTE

Make sure that you are using the correct material of O-rings and seals for the media you are using. We use a standard silicone based grease which is suitable for most applications, if you are unsure of suitability for your media please contact us.

ITEMS NEEDED FOR SERVICE

PARTS NEEDED FOR SERVICE:	Spare part kit and Sealing kit (for order numbers see the info box at the bottom of this page)
USEFUL TOOLS:	Tool 001 (O-Ring Tools)* Tool 020 (Piston guide tool)* Screwdriver 10 mm Allen Key *Can be ordered from MannTek
O-RINGS KIT INCLUDES:	5 pcs. O-Rings
OTHERS:	Tool 081 - Flouroflon® grease. (Chemical neutral silicon oil with PTFE. Used for O-rings)* Loctite® *Can be ordered from MannTek
CLEANING AGENTS:	Strong clean® (Petroleum based degreasing agent) Alcohol (95 % chemical clean ethanol)

PLEASE NOTE

Use only original MannTek spare parts for maintenance

Sealing kit (O-04-YY)

yy means the O-ring material key, xx means the coupling material according to the product catalogue. You will find it also as the 6th to 9th sign in the serial number (e.g. 0414Dxxyy).

MAINTENANCE AND SERVICE

Always de-pressurise the system and rinse off the parts before beginning any maintenance work. Use protective goggles. Do not handle O-ring seals without gloves if the material appears charred, gummy or sticky.

Use tweezers and wear neoprene or PVC gloves. Do not touch adjacent parts with unprotected hands. Rinse off the parts once again before starting the "daily inspection".

DAILY INSPECTION

1. Visually inspect the coupling for cleanliness, wear, loose parts, damage and signs of corrosion.
2. Visually inspect the coupling for leaks.

REGULAR SERVICE

The regular service interval is very much depending on local regulations and application conditions. If nothing else is specified or agreed and it is a new application with unknown parameters we recommend to make a first service after one year and then decide depending on the inspection result about further intervals.

The service procedure shall be as follows:

1. Replace the O-rings.
2. Replace worn or damaged components.

DISASSEMBLE

When putting the coupling into service, there's a risk of fluid spurt. Adopt special protective measures such as personal protective equipment. Always ensure the system is properly cleaned. After cleaning, remove any residue from the cleaning agent.

a. Wear suitable personal protective equipment.

b. Ensure the coupling is de-pressurised and empty.

c. Clean the coupling before disassembly (use a cleaning agent suitable for the pumped fluid).

Unscrew the three screws that lock the spindle steering. There is a distance pin in the piston protruding from the housing. For disassembling, use a support plate with a hole in the middle to avoid any damage to the piston.

Tool: Allen Key No. 6

Press down the spindle steering and turn it free. Release it carefully; the piston guide is spring-loaded, posing a risk of injury. Using our special tool makes the work easier and increases safety. Repeat the same procedure with the second half.

Take out all the parts from the body:

Body
Piston
Spindle steering, spring cap, and bushing
Spring

CHANGE O-RINGS

Replace the O-ring (pos. 3) on the piston with a new greased O-ring, ensuring equal pressure around the O-ring. The O-ring must be pressed into the groove on the piston. Use only grease suitable for O-ring material. For mounting the new O-ring, use MannTek spare parts only. Special tools are helpful for a good fit of the O-ring.

Unscrew the nine screws securing the breaking flange and the hose together.

Tool: Allen Key 10 mm

Replace the O-ring (pos. 19) on the body with a new greased O-ring. Use only grease suitable for the O-ring material. Mount back the coupling flange to the body, using Loctite® on the nine screws.

REASSEMBLE

The piston is larger in diameter than the three brackets for the piston guide. Introduce the piston as shown. Put it into a relaxed position in the valve seat. Take care, as the piston is sticking out on the other side.

Fit the spring with the spring cap and spindle steering. Press down the spindle steering and turn it to fix it in its position.

Fit the screws into the given holes in the body and fixate the spindle steering by mounting the three locking screws. Use Loctite® for locking the screws.

Replace the O-ring (pos. 15) on the body with a new greased O-ring. Use only grease suitable for O-ring material.

Before reassembling both halves together, ensure to test each half separately according to the test procedure described on the last page.

Set both halves onto each other and press them carefully together. It is important that the bodies align with each other when pressing the halves together. Do it carefully to avoid destroying the O-Ring.

Using a press and a fixture makes the work easier. Place the clamps (b) over the coupling flanges' smaller diameter (d) and put the ring (a) over the clamps to hold them in place. Ensure that the bolts (c) are placed on either side of the clamps.

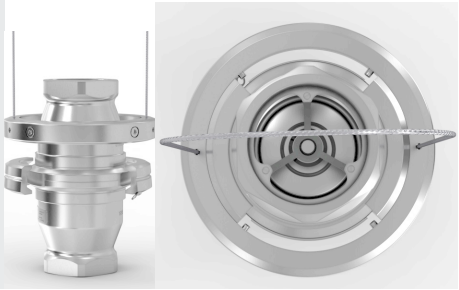

TEST THE COUPLING

After the coupling is completely reassembled, provide a pressure test according to the test procedure on the last page.

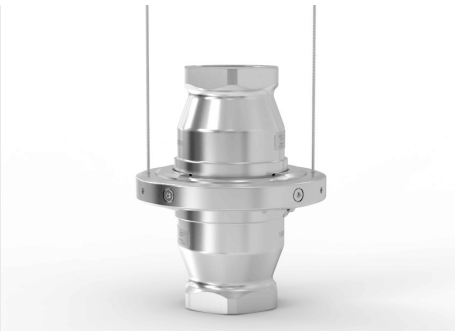

Please note the direction of release.

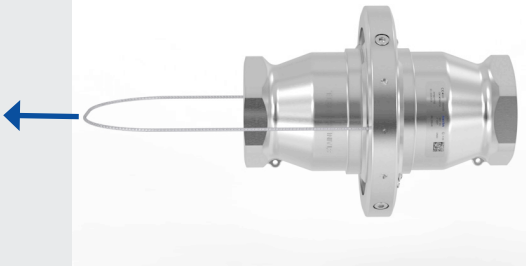

TEST PROCEDURE

After each major service a pressure test and a leak test of each coupling is required.

If only the O-Ring kit is replaced a leak test is enough.

If any pressure bearing parts are changed, a pressure test with water must first be made at 1,5 times the working pressure before testing the coupling with air for the leak test.

The following test parameters are in accordance with EN12266 and EN14432 and ISO5208, test each half separately before you connect both halves:

TEST PROCEDURE	TEST PRESSURE	STOP TIME	ACCEPTANCE CRITERIA
Leak test (air)	0,3 bar	15 s	No visually detectable leakage for the duration of the test*
	6 bar	15 s	
Pressure test (water) (if applicable)	1,5x working pressure	1 min	

TABLE 1 – TEST PRESSURE

If a pressure test should be achieved for the coupling mounted in an assembly follow the respective test instructions for the equipment.

STORAGE

Store coupling in a dry, dust free, dark place, in ambient temperature.