MannTek

DCC Service instruction

6” tank unit

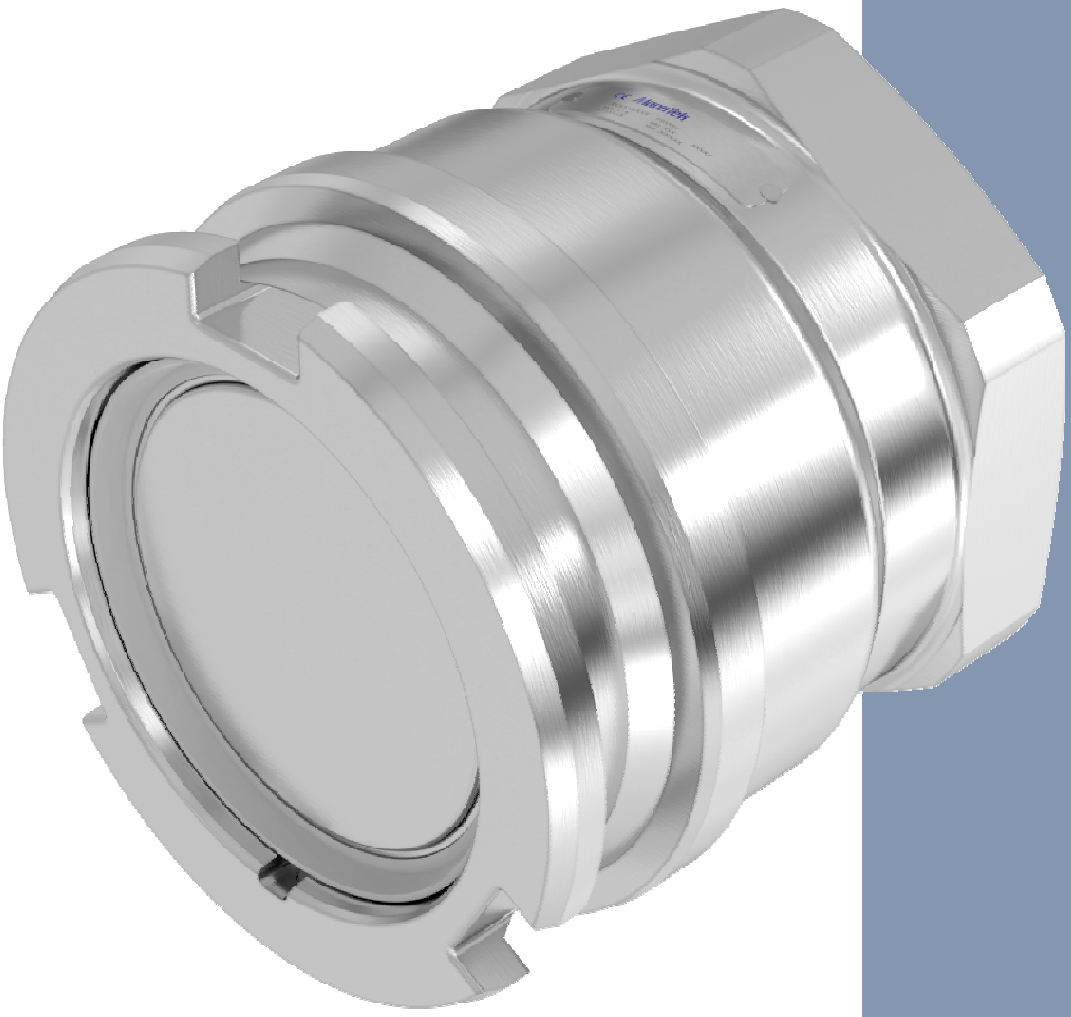

manntek.se

MannTek

Quality, Health, Safety and Environment Policy

Our objectives are simple – no accidents, no occupational illness or work related accidents, no negative environmental impact and optimizing and continuously improving customer satisfaction wherever we operate.

Mariestad, December 14 2016

Markus Bäckström

What does this mean?

In our daily work to develop, sell, deliver and maintain our products this means to act as soon as we recognize a risk for:

- Delivery of products with insufficient technical quality
- Giving incorrect information
- Not complying with laws an regulations concerning our operation
- Causing negative environmental impact
- Causing occupational illness or accidents
- Not be able to keep promises on delivery terms (product and information)

To act, here means to point out the risk and to make sure we take a balanced decision to prevent what is undesired.

(This policy includes all that is traditionally covered in separate policies for quality, health, safety and environment)

TANK UNIT 6”

MATERIAL: SS

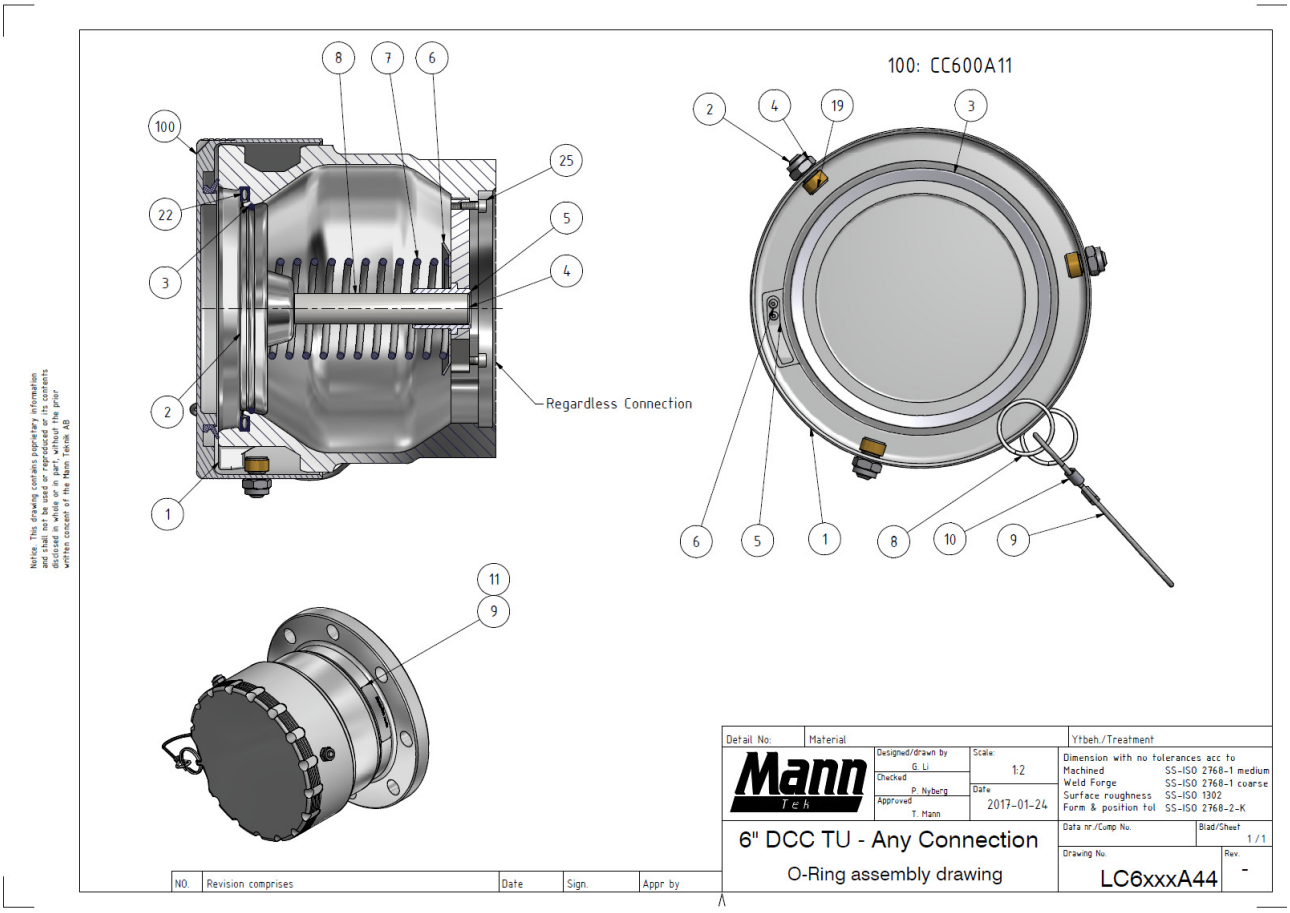

PARTS NEEDED FOR SERVICE: Spare part kit and O-ring kit (see page 4)

TYPE OF CONNECTION: Threaded and Flanged couplings have the same service instruction. The cap is part of the tank unit.

PERFORM A SERVICE: If leaking
According to application service plan

PLEASE NOTE!

Make sure that you are using no grease for cryogenic applications.

MannTek

MAINTENANCE AND SERVICE INSTRUCTION

Always depressurise the system and rinse off the parts before beginning any maintenance work. Use protective goggles.

Use tweezers and wear gloves which are sufficient for cryogenic applications.
Do not touch adjacent parts with unprotected hands. Rinse off the parts once again before starting the “daily inspection”

DAILY INSPECTION

1. Inspect the coupling surface for cleanliness and corrosion.
2. Inspect the O-ring in the tank unit connection for serviceability and correct seating in the grove.
3. Inspect the tank- and hose unit for faultlessness and external signs of seizure.

REGULAR SERVICE

Regular service interval is very much depending on local regulations and application conditions. If nothing else is specified and it is a new application with unknown parameters we recommend to make a first service after one year and decide then depending on the inspection result about further intervals.
The service procedure shall be as follows:

1. Exchange sealing.
2. Replace worn or damaged components.

Check the state of the connection surface and verify that it is clean before proceeding with the connection.

Couple the repaired unit to a serviceable hose or tank unit as appropriate and check for correct operation of the valve actuating and bayonet locking mechanism. Couple and uncouple the unit(s) several times.

USE ONLY ORIGINAL MANNTEK SPARE PARTS FOR MAINTENANCE.

Seal kit	(O-LC6-06)
Spare part kit	(S-LC6A-44)
Service kit cap	(S-CC6A)

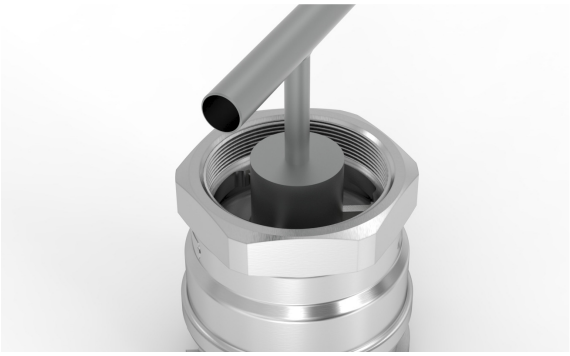

Unscrew the three screws (pos.25, see drawing page 3) in the spindle steering. Press down the spindle steering and turn it free. Release it carefully.

Piston guide is spring loaded.
Risk of injury.

Using our special tool makes work easier and therefore increases safety.

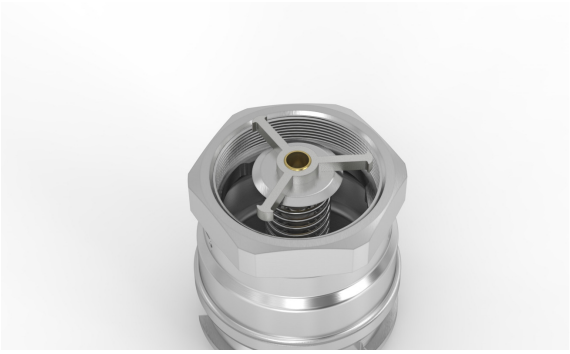

Take out all the parts from the body (spindle steering, spring cap, spring).

Replace damaged parts if necessary.

Take out the piston as shown on the picture.

Replace the O-ring (pos.3) on the piston with a new O-ring.

Make sure that the seal doesn't get scratched when mounting.

To insert the piston back again it should be put in a relaxing position in the valve seat

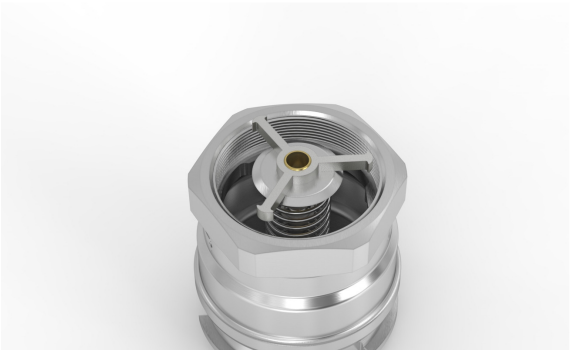

Put the spring (pos.7), spring cap (pos.6) and the spindle steering (pos.4) back into the body.

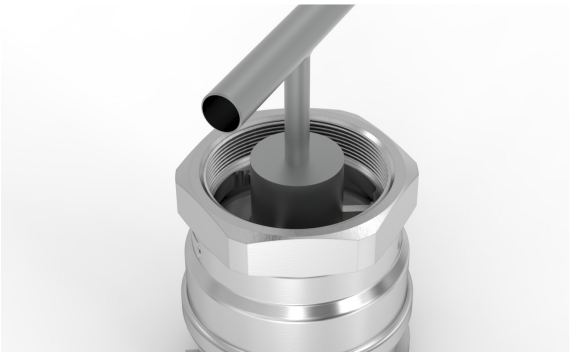

Press down the spindle steering and turn, to fix it in its position.

Make sure that the spindle steering is in its right position. Mount back the three screws to hold the spindle steering in place.

Replace the sealing ring (pos. 22) by a new one.

Make sure that the sealing surface in the bottom doesn't get scratched, not the seal either when mounting.

If needed replace the sealing ring in the dust cap by a new one.

Check that the spring and the rollers of the cap are in working properly. Replace them if necessary.

Finally, make a visual inspection that everything is in its right place. Do also a test connection/disconnection with a hose unit that not is mounted and not has any fluid inside.

TEST PROCEDURE

After each service a tightness test of each coupling is mandatory.
The following test parameters are in accordance with EN12266 and EN14432:

Test procedure	Test pressure	Acceptance criteria
Tightness test (liquid nitrogen)	6 bar +/- 1 bar	No visually detectable leakage for the duration of the test

Table 1 – Test pressure

Size	Cooling down	Keeping time
DN 25	5 min	30 s
DN 50	10 min	45 s
DN 65	12 min	60 s
DN 80	15 min	60 s
DN 100	18 min	90 s
DN 150	20 min	120 s

Table 2 – Minimum test duration

TEST PROCEDURE:

- Connect the hose unit to the tank unit
- At the beginning the couplings shall be cooled down by opening the tank with liquid nitrogen for the cooling down time specified in Table 2.
- Maintain the test pressure for the keeping time specified in Table 2.
- Determine the leakage rate.
- Disconnect the hose unit and the tank unit.
- Maintain a test pressure of 5 bar in the tested unit(s) for the keeping time specified in Table 2
- Determine the leakage rate while depressurizing the Units.

STORAGE

Store coupling in a dry, dust free, dark place, in ambient temperature.

© Copyright 2008 Mann Teknik AB. Mann Teknik AB reserves the right to make changes at any time in prices, materials, specifications and models and to discontinue models without notice or obligations.