MannTek

DAC Service instruction

2½” tank unit

manntek.se

MannTek

Quality, Health, Safety and Environment Policy

Our objectives are simple – no accidents, no occupational illness or work related accidents, no negative environmental impact and optimizing and continuously improving customer satisfaction wherever we operate.

Mariestad, February 28 2008

Tony Mann

What does this mean?

In our daily work to develop, sell, deliver and maintain our products this means to act as soon as we recognize a risk for:

- Delivery of products with insufficient technical quality
- Giving incorrect information
- Not complying with laws and regulations concerning our operation
- Causing negative environmental impact
- Causing occupational illness or accidents
- Not be able to keep promises on delivery terms (product and information)

To act, here means to point out the risk and to make sure we take a balanced decision to prevent what is undesired.

(This policy includes all that is traditionally covered in separate policies for quality, health, safety and environment)

TANK UNIT 2½”

MATERIAL: AL

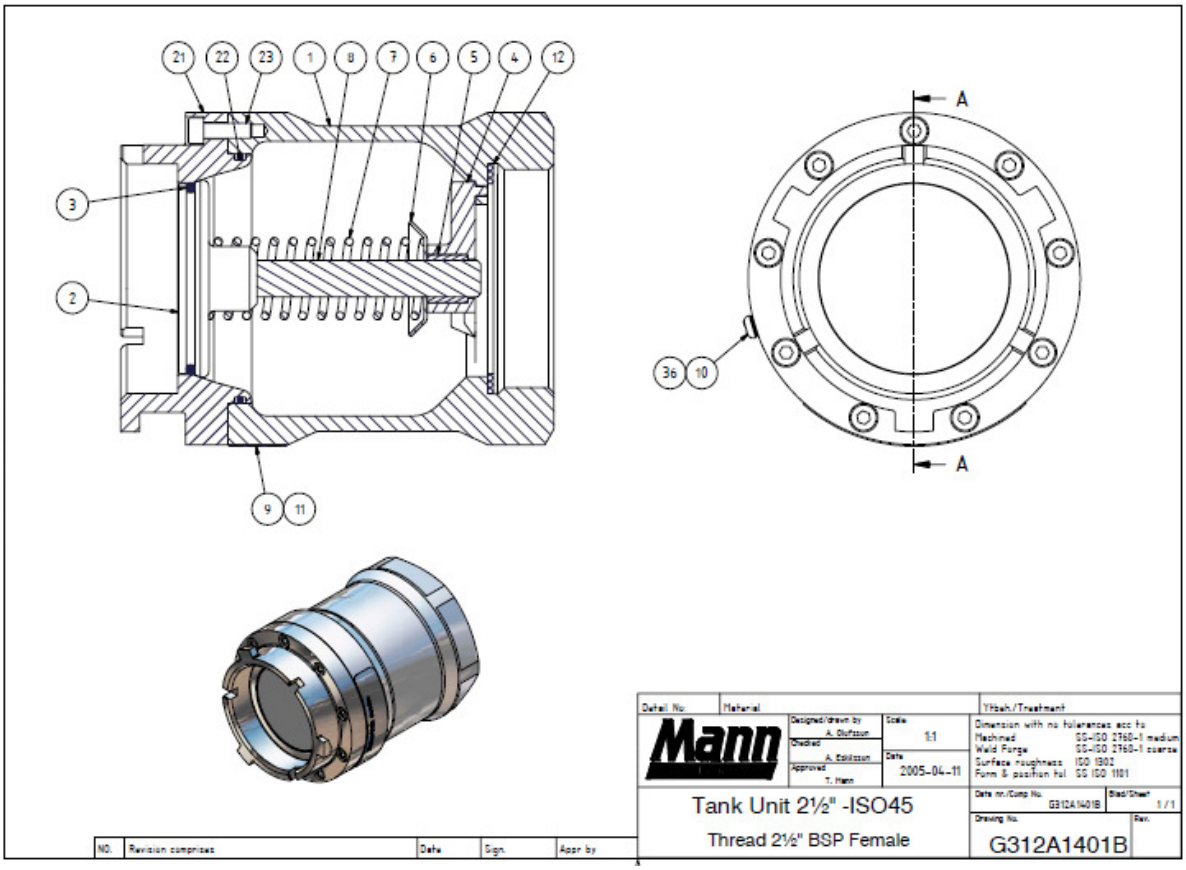

PARTS NEEDED FOR SERVICE: Spare part kit and O-ring kit (see page 4)

PERFORM A SERVICE: If leaking
Every year
Change of media

PLEASE NOTE!
Make sure that you are using the right type of O-rings and seals for the media you are using. We are using a standard silicone based grease for standard media, for special media please contact us.

MannTek

MAINTENANCE AND SERVICE INSTRUCTION

Always depressurise the system and rinse off the parts before beginning any maintenance work. Use protective goggles. Do not handle O-ring seals if the material appears charred, gummy or sticky.

Use tweezers and wear neoprene or PVC gloves. Do not touch adjacent parts with unprotected hands. Rinse off the parts once again before starting the “daily inspection”

DAILY INSPECTION

1. Inspect the coupling surface for cleanliness and corrosion.
2. Inspect the O-ring in the house unit connection for serviceability and correct seating in the grove.
3. Inspect the hose unit swivel for free rotation.
4. Inspect the tank- and hose unit for faultlessness and external signs of seizure.

THREE-MONTH INSPECTION

1. Exterior cleaning of the coupling halves with a neutral cleanser.
2. Careful “daily inspection” of cleaned units.

ONCE A YEAR

1. Exchange sealing and washer at least once a year.
2. Refill the hose unit ball bearing grooves with grease
3. Replace worn or damaged components. Repair procedures are straightforward and no special tools are required.

Check the state of the connection surface and verify that it is clean before proceeding with the connection.

Couple the repaired unit to a serviceable hose or tank unit as appropriate and check for correct operation of the valve actuating and bayonet locking mechanism. Couple and uncouple the unit(s) several times.

USE ONLY ORIGINAL MANNTEK SPARE PARTS FOR MAINTENANCE.

Spare part kit	(S-G3-xx)
O-ring kit	(O-G3-yy)

xx and yy means the material key according to the product catalogue. You will find it also as the 6th to 9th sign in the serial number (e.g. G312BxxyyB).

Remove the flat sealing.

NPT-thread doesn’t have a flat sealing.

Make sure you don’t scratch the seal face.

Press down the spindle steering and turn it free.

Take out all the parts from the body (spindle steering, spring cap, spring).

To take out the piston put into a relaxing position in the valve seat.

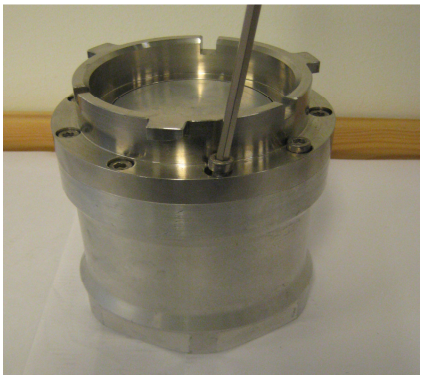

Unscrew and remove the lock screws from the swivel ring.

Remove the swivel sleeve from the swivel ring.

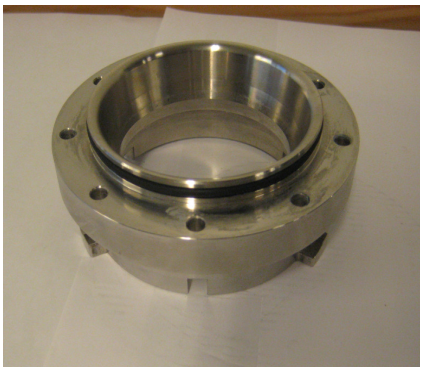

Replace the swivel sleeve O-ring (pos.22) with a new greased one.

Replace the PTFE bushing (pos.5) in the spindle steering with a new one.

Replace the O-ring (pos.3) on the piston with a new greased O-ring.

Have an equal pressure around the O-ring. The O-ring must be pressed into the groove in the piston.

To insert the piston back again it should be putted in a relaxing position in the valve seat

Replace the spring (pos.7), spring cap (pos.6) and the spindle steering (pos.4).

Press down the spindle steering and turn, to fix it in its position.

Make sure that the spindle steering is in it’s right position.

Assemble a new flat sealing (pos.12).

NPT-thread does not have a flat sealing.

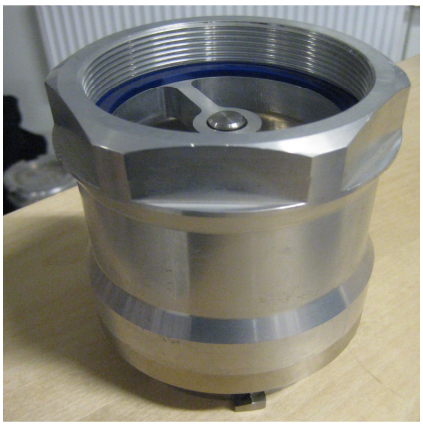

Finally, make a visual inspection that everything is in its right place. Do also a test connection/disconnection with a hose unit that not is mounted and not has any fluid inside.
If the coupling works all right you are ready to use it again.

TEST PROCEDURE

After each service a pressure and tightness test of each coupling is mandatory. If only the O-Ring kit is replaced a seat tightness test is enough.
The following test parameters are in accordance with EN12266 and EN14432:

Test procedure	Test pressure	Acceptance criteria
Shell tightness test (Water)	1,5 x working pressure	No visually detectable leakage for the duration of the test
Seat tightness test (Air)	6 bar +/- 1 bar	
	Max 0,3 bar	

Table 1 – Test pressure

Nominal size	Minimum test duration
Up to DN 50	15 s
DN 65 to DN 150	60 s

Table 2 – Minimum test duration

TEST PROCEDURE:

- Fill the downstream valve cavity including, if appropriate, the cover cavity with the test fluid.
- Apply the test pressure specified in Table 1 in the direction tending to close the obturator.
- Maintain the test pressure for the test duration specified in Table 2.
- Determine the leakage rate.

If a pressure test should be achieved for the coupling mounted in an assembly follow the respective test instructions for the equipment but do not exceed 1,5 x Working Pressure of the coupling.

STORAGE

Store coupling in a dry, dust free, dark place, in ambient temperature.

© Copyright 2011 Mann Teknik AB. Mann Teknik AB reserves the right to make changes at any time in prices, materials, specifications and models and to discontinue models without notice or obligations.